RE-110147C

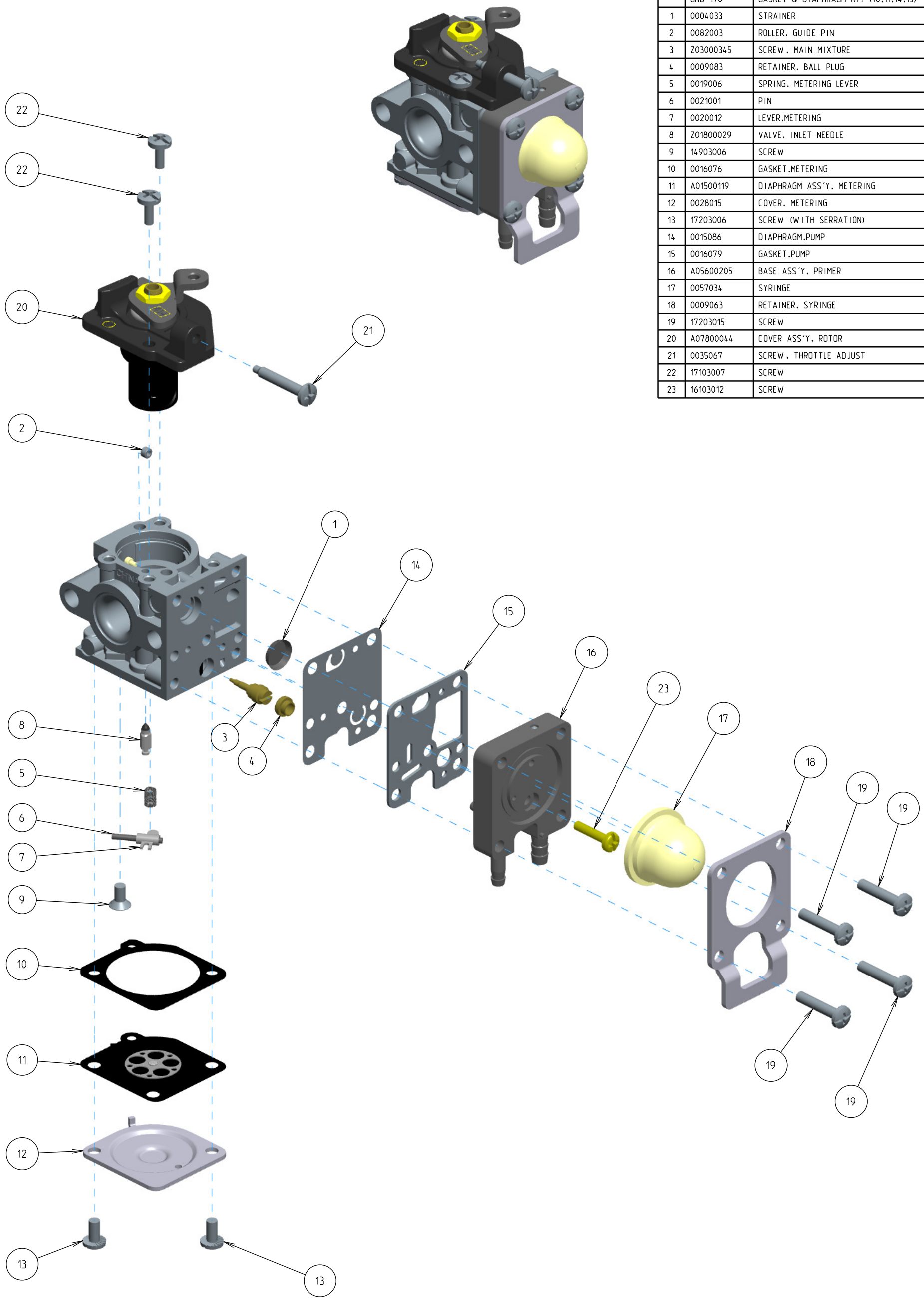

ITEM	ZAMA PART NR.	DESCRIPTION
	RE-110147C	CARBURETOR ASSEMBLY
	RB-283	REBUILD KIT (1.2.5.6.7.8.10.11.14.15)
	GND-170	GASKET & DIAPHRAGM KIT (10.11.14.15)
1	0004033	STRAINER
2	0082003	ROLLER, GUIDE PIN
3	Z03000345	SCREW, MAIN MIXTURE
4	0009083	RETAINER, BALL PLUG
5	0019006	SPRING, METERING LEVER
6	0021001	PIN
7	0020012	LEVER,METERING
8	Z01800029	VALVE, INLET NEEDLE
9	14903006	SCREW
10	0016076	GASKET,METERING
11	A01500119	DIAPHRAGM ASS'Y, METERING
12	0028015	COVER, METERING
13	17203006	SCREW (WITH SERRATION)
14	0015086	DIAPHRAGM,PUMP
15	0016079	GASKET,PUMP
16	A05600205	BASE ASS'Y, PRIMER
17	0057034	SYRINGE
18	0009063	RETAINER, SYRINGE
19	17203015	SCREW
20	A07800044	COVER ASS'Y, ROTOR
21	0035067	SCREW, THROTTLE ADJUST
22	17103007	SCREW
23	16103012	SCREW